FROM SENSORY SPACE TO MOTOR COMMANDS: LESSONS FROM SACCADES

L. M. Optican[1], C. Quaia[1,2]
[1]Laboratory of Sensorimotor Research, National Eye Institute, Bethesda, MD 20892 USA
[2]DEEI - Università degli Studi di Trieste, Trieste, Italy

Abstract - **Our distributed model of the saccadic system faithfully reproduces saccadic waveforms and the patterns of neuronal activity observed in several brain areas. However, our model is not based on principles found in classical theories of motor control. In this paper we attempt to extract from our model some general principles about neural motor controllers. We conclude that intrinsic brain signals might represent non-physical signals, such as desired sensory states, approximate motor drives, and distributed motor commands, rather than physical signals (e.g., desired displacement or motor error). Furthermore, our model demonstrates that the critical transformation from maps of sensory space to temporal motor commands is not necessarily carried out explicitly. Instead, the transformation can be implicit, emerging from network connections within a feedback loop.**
Keywords - **Saccade, Control System, Modeling, Eye Movement, Sensorimotor Transformation**

I. INTRODUCTION

Historically, models of the neural control of movement have been based on classical systems or control theory principles. An example of this approach is represented by the model of the saccadic system proposed by D.A. Robinson over 25 years ago [1], and by its many data-driven modifications [e.g., 2-5]. Such models have helped us formalize the problems that the brain faces, provided insights into adaptive processes, and often inspired further experiments. However, control system models do not accurately represent brain structure and activation patterns. Worse, they can impede the achievement of a thorough understanding of the brain by forcing our interpretations of experimental data to match arbitrary expectations.

Whereas this approach was justified in the past, when very little was known about the brain at the neuronal level, it is now important to work with models that mimic actual brain structure and neuronal activity. One of the key advantages of these new models, which are called *neuromimetic*, is their ability to predict behavior under novel experimental conditions. Furthermore, they can provide insight into the nature of neural signals and their encoding, at both the single neuron and population level.

Our recently proposed neuromimetic model of the saccadic pulse generator [6, 7] makes realistic movements and accurately reproduces neuronal activity under different experimental conditions; yet it does not fit into any classical controller scheme. This lack of conformance induced us to investigate whether some general principles about information processing during the neural control of movement could be inferred from our neuromimetic model.

II. MODEL COMPARISON

In this section we present a comparison between classical models and our model of the saccadic burst generator.

A. Classical Models

The eye plant (globe, extraocular muscles, and orbital tissues) converts neural innervation signals into ocular orientation. Accordingly, information about target location must be turned into innervation signals. In all classical models (Fig. 1A), target location, encoded in retinal coordinates, is converted into a desired movement vector (E_d), encoded in motor coordinates, by means of a Sensory–Motor Transformation (SMT). The importance of this step cannot be stressed enough, as foveation of the same target location can require different movements (depending upon the current orientation of the eyes, the speed of the target, and other contextual information). The desired movement is then converted into the innervation signal (Pulse) by an inverse model of the eye plant (by definition an element that receives as input the desired movement, and produces as output the innervation required to produce that movement).

The system described in Fig. 1A is feed-forward, and thus lacks the ability to compensate for internal noise or errors in the inverse model of the plant. However, it is known that neural systems, including the saccadic system, have such abilities; thus, the inverse model is usually implemented as a feedback system (Fig. 1B) in which E_d is compared with another temporal signal representing an estimate of the current ocular displacement ($\hat{E}$). This signal is obtained by feeding the innervation signal to a forward model of the plant. The output of the comparator (circle) gives the difference between these two signals, which represents an estimate of the dynamic motor error ($\hat{m}_e$). The motor error is then used to generate the innervation signal (Pulse). Because the knowledge of target location is obtained from retinal information, which is spatially mapped, this model requires an explicit computation to convert the cell-coded target location into a rate-coded desired movement vector. This computation is called a Spatial–Temporal Transformation (STT).

Alternatively (Fig. 1C), the model could be built as the combination of an inverse model of the plant (in the forward path) under long term adaptation, and a forward model of the plant working in feedback to compensate for short term departures from the expected behavior. Note that this case also requires both an SMT and an STT.

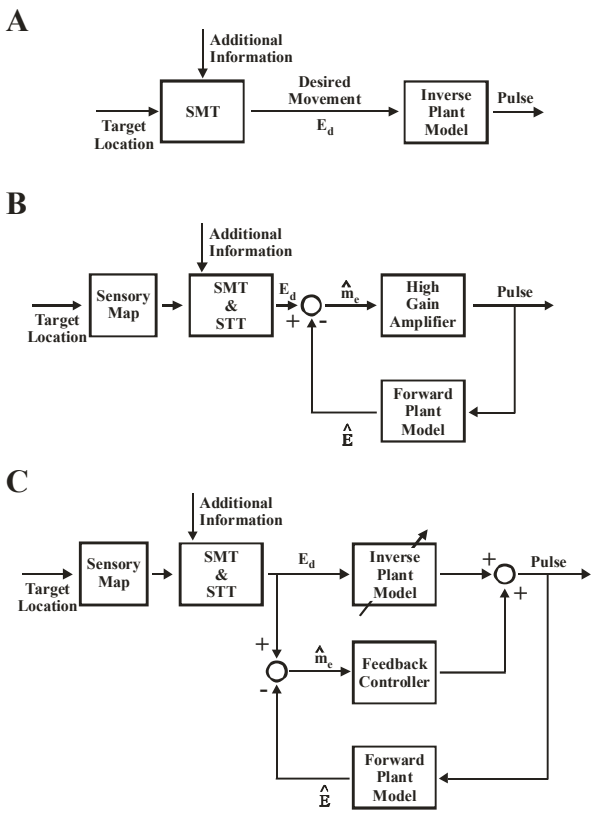

Fig. 1. Classical control system models of saccade generation. (A) Target location on the retina (a sensory signal) is converted into a desired movement, E_d (a motor command) by a sensory–motor transformation (SMT) using additional information (see text). E_d is fed to an inverse model of the plant to produce the innervation that moves the eye (Pulse). (B) Target location is represented by activity on a sensory map, thus a Spatial-Temporal Transformation (STT) is required to obtain the rate-coded signal, E_d. The inverse model of the plant is usually implemented as a feedback loop in which E_d is compared with a temporal signal estimating the current ocular displacement, $\hat{E}$. $\hat{E}$ is obtained by feeding the pulse to a forward model of the plant. The output of the comparator (circle) gives the difference between these two signals, which represents the dynamic motor error ($\hat{m}_e$). (C) Alternatively, the model could be built as the combination of a feed-forward inverse plant model (under long term adaptation, arrow), and a forward plant model in feedback, so that a feedback controller can compensate for departures from the expected behavior.

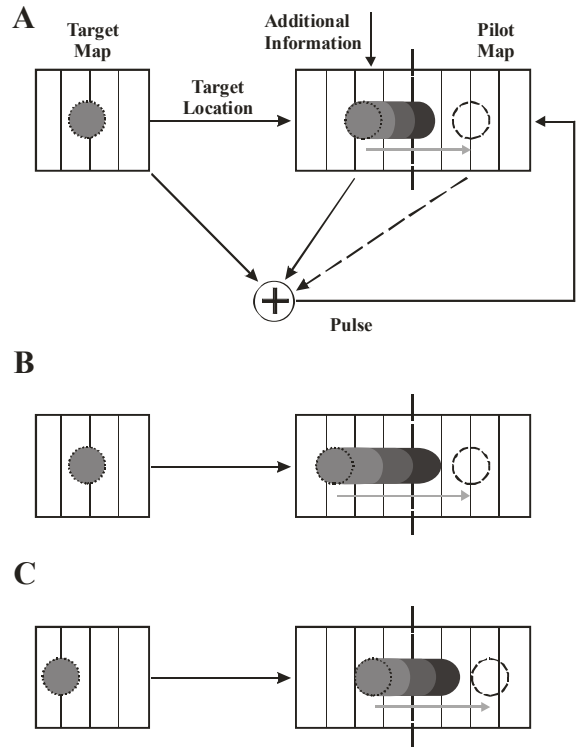

Fig. 2. Functional schema of our neuromimetic model. (A) The locus of activity on the target map is set by the desired target location, and is fixed during the movement. Activity on the pilot map is dynamically adjustable during the movement. Velocity feeds back to that map (Pulse) and causes activity to spread (gray arrow and ovals) past the midline (vertical dashed line). The activity on the pilot map steers the movement, and then stops it when inhibition (dashed arrow) from the other side exceeds the net excitation from both maps (when the activity has spread to the dashed circle). (B) Example of how context is used by the pilot map. To make the saccade size larger for the same target, the initial locus of activity (dotted disk) is offset away from the midline. (C) Movement size is not specified by the initial locus of activity on either the spatial or the pilot map alone. A movement the same size as that called for in 2B can be made in response to a target at a more eccentric location that is moving toward the fovea. This simply requires that the initial locus on the pilot map be closer to the midline. Thus, the desired movement signal is only implicit in the initial locus of activity on both maps.

To summarize, in classical models of the saccadic system one can identify the following key elements: a sensory–motor transformation, a spatial–temporal transformation, a rate-coded desired eye movement signal, and a rate-coded error signal.

B. A Neuromimetic Model

A simplified diagram of our model's pulse generator is shown in Fig. 2A. Here we focus only on its functional aspects; the close correspondence between the pathways and structures in the model and those in the brain is outlined in other publications [6-8]. The pulse of innervation is the sum of two contributions, or directional drives (we term directional drive a signal that, if acting alone, would rotate the eyes in a given direction with a certain speed). The first of these two signals comes directly from a target map (in retinal coordinates), where the location of the target to be foveated is encoded spatially. This map is like the sensory map shown in Fig. 1, but there is no SMT in this pathway, as the amplitude and direction of the movement needed to foveate the target is not computed here. Furthermore, the STT is absent too, as the information spatially coded on the map (the location of the target) is never converted into a temporal code. In fact, as noted above, the temporally coded output of this map represents only a directional drive, and can be the same for different target locations (regardless of the movement needed to foveate them). In our model this signal is simply a weighted sum of all the activity on the map (an operation that neural circuits can carry out very easily).

This map also provides information about target location to another spatially coded map, which we call a pilot map. The

retinotopy of the target information is retained across both maps, even though there is some divergence in the projections, so that a small site on the target map can send excitatory projections to a fairly large fraction of the pilot map. In addition to this information (target location) the pilot map also receives some additional information, necessary to determine the amplitude and direction of the movement that needs to be executed to foveate the target (this is the same information used by the SMT in classical schemes).

Using all these input signals, this pilot map generates another directional drive (a rate-coded signal) which, summed to the other one, guarantees that the appropriate movement is generated. Unlike the first signal, which always drives the eyes in the same direction, this second drive steers and accelerates the eyes (a positive contribution, solid line), and brakes them at the end (a negative contribution, dashed line). The movement ends when the negative contribution of the second drive cancels out the positive contribution of the other drives.

Feedback allows this model to compensate for noise in the pulse generator (represented in Fig. 2A by the summing junction). The feedback only needs to act on the second drive, so that the speed of its transition from a positive to a negative contribution is directly proportional to the pulse (which determines the speed of the movement). The mechanism that could be employed to implement this functionality is fairly simple, and it is best explained with an example. Let's consider a rightward movement, and assume that the pilot map is topographically coded, so that the left half of the map pushes the eyes to the right (positive contribution) and the right half of the map brakes the eyes when they are moving to the right (negative contribution).

Just before the beginning of the movement, a site on the left half of the map becomes active (Fig. 2A, gray disk in left half). In the first phase of the movement both maps will provide a positive drive, thus moving the eyes to the right. As the movement progresses, velocity feedback from the pulse generator (Pulse) causes the activity on the map to spread towards the opposite side (gray arrow), with a speed that is directly proportional to the pulse. Eventually the other side of the map becomes activated, producing a negative contribution. As this contribution grows the pulse shrinks, until it gets to zero (when the activity has spread to the dashed circle) and the saccade ends. At this point the activity on the map does not spread any more and it slowly decays toward zero.

C. *Structural Differences*

At first sight our model resembles the classical scheme in Fig. 1C, with the feed-forward part corresponding to the first pathway in our model, and the feedback part corresponding to the second pathway. However, the similarity is deceiving, as the classical scheme requires a rate-coded desired movement signal, which is not available in our model. Furthermore, in Fig. 1C the feed-forward pathway assures that the behavior is accurate on average, whereas the feedback pathway takes care of the noise, perturbations, and short term changes in the plant. In our model, instead, the second pathway takes care of both the accuracy and the consistency of the movements.

Another fundamental structural difference is that, because in our model the feedback information is not fed to a *comparator*, the cornerstone of classic feedback control systems, our model does not require an explicit STT (i.e., there is no explicit computation of an error signal). Our model's lack of an STT is a characteristic of other distributed models of the saccadic system, where this result was achieved by enclosing the target map (which in their case was also a movement map) within a feedback loop [e.g., 9, 10].

D. *Achieving Saccade Accuracy*

The goal of the saccadic system is to produce fast and accurate movements. In classical models, good performance is guaranteed because a motor error signal (the difference between where the eye should go and where it is) is fed through a system with a high gain. That requires that both signals (E_d and $\hat{E}$) be temporally coded and sent to a comparator.

In our model things are very different. As noted above, the movement ends when the negative contribution generated by the second pathway balances the positive contribution coming from the first pathway (which decays throughout the movement). The duration of the movement is then a function of both the location of the site initially activated, and the speed of the spread of activation. The farther away from the midline the site initially activated lies, the larger will be the movement. Also, because the speed of the spread is directly proportional to the pulse (and thus to the speed of the movement), if the movement is fast the activity will reach the other side quickly, whereas if it is slow it will get there later. Thus, other things being equal, the duration of the movement is inversely proportional to its speed, keeping the amplitude constant.

Achieving accuracy is then a two-fold problem: first, the brain needs to choose an appropriate proportionality constant between the speed of the spread and the intensity of the pulse. This parameter needs to be varied only when the properties of the plant (such as the viscosity of the muscles) change, and, over a short period of time, we can consider it a constant. Under this hypothesis, the most important determinant of the amplitude of the movement is the location of the site initially activated on the pilot map. Thus, it must be a function of the location of the target and all the other information (e.g., the speed of the target, the initial position of the eyes, information about the required behavior) that determines the metrics of the desired movement. Then, all the brain needs to do to generate a different movement for the same target location is to change this initial site. If it is moved farther from the midline, the movement will be larger (Fig. 2B); if moved closer, it will be smaller.

From this, one might be tempted to conclude that the location of the site initially activated on the pilot map encodes the desired movement, and thus that the pilot map implements an SMT. However, this is not the case because only the distance covered by the spreading activity is directly proportional to the displacement of the eyes, and how far it spreads is a function of both directional drives. If we now want to make a movement that

has the same amplitude as the one shown in Fig. 2B, but in response to a more eccentric target (Fig. 2C), the site initially activated on the pilot map will need to be closer to the midline than it was in Fig. 2B. This is because the directional drive provided by the first pathway is now stronger (because of the more eccentric location of the target), and to stop the movement the pilot map needs to start applying the brake earlier, so that by the time the eyes have traveled the desired distance the inhibition is also stronger than it was in Fig. 2B.

As this example shows, the size of the saccade is determined by both the locus of activity on the target map and the initial locus of activity on the pilot map. Thus, in our model there is no *explicit* representation of the desired displacement signal. This signal is only *implicit*, and it is *distributed* across the two maps. This is in stark contrast with models inspired by classical control theories, which require an explicit desired movement signal.

E. Advantages of a Non-classical Model

There are many advantages of our scheme over classical models, such as reduction in computational complexity, decreased sensitivity to noise, and resistance to failure.

Our scheme reduces complexity by not computing a desired movement signal, not using comparators, and not needing an explicit spatial-temporal transformation. This last operation is particularly critical, as it would require the accurate division of two dynamic signals, something not easy to accomplish with neural circuits (note that any noise in the STT would be transferred as-is to the output, because this operation is outside the feedback loop).

Thanks to its extensive use of spatial codes (i.e., maps), our scheme is insensitive to noise arising in individual elements. The only element sensitive to noise is the pulse generator, where the discharge level can be very high and the noise across neurons is likely to be correlated. However, that signal is under feedback control, and so such fluctuations are automatically compensated.

Our model is also much more resistant to failure than classical models, in the sense that failures to single elements are usually not critical. This important property can be ascribed to three factors: first, each block is either not vital to the functioning of the circuit (like the pilot map) or simple enough to be easily replaced (like the target map). Second, the functionality is distributed across different areas. And third, the structure is such that one pathway (the first one) provides an approximate motor drive that is good enough for survival, while the other pathway improves the movement's accuracy and consistency. This is not the case in classical models, where the failure of any single block would impair the whole system.

III. DISCUSSION

Comparison of classical and non-classical models suggests that the encoding of movement signals in the brain may occur in a completely unorthodox way, one that does not internalize the physical signals (e.g., motor error or desired displacement) associated with the movement. Instead, intrinsic brain signals may represent desired sensory states (i.e., which target needs to fall on the fovea after the movement), approximate motor drives, and distributed motor commands.

Our neuromimetic model is based on what is known about the physiology and anatomy of the saccadic system, where the *superior colliculus* would represent the target map and the *cerebellum* the pilot map. Of course, this particular model may not represent how the brain actually controls saccadic eye movements. However, it demonstrates once more that, through the proper connection of many computationally simple elements, Nature can devise solutions to control problems that are at the same time unorthodox and advantageous (compared to classical control schemes).

REFERENCES

[1] D. S. Zee, L. M. Optican, J. D. Cook, D. A. Robinson, and W. K. Engel, "Slow saccades in spinocerebellar degeneration," *Arch. Neurol.*, vol. 33, pp. 243-251, 1976.

[2] R. Jürgens, W. Becker, and H. H. Kornhuber, "Natural and drug-induced variations of velocity and duration of human saccadic eye movements: Evidence for a control of the neural pulse generator by local feedback," *Biol. Cybern.*, vol. 39, pp. 87-96, 1981.

[3] J. A. M. Van Gisbergen, A. J. Van Opstal, and J. J. M. Schoenmakers, "Experimental test of two models for the generation of oblique saccades," *Exp. Brain Res.*, vol. 57, pp. 321-336, 1985.

[4] P. Dean, "Modelling the role of the cerebellar fastigial nuclei in producing accurate saccades: the importance of burst timing.," *Neurosci.*, vol. 68, pp. 1059-1077, 1995.

[5] S. Grossberg, K. Roberts, M. Aguilar, and D. Bullock, "A neural model of multimodal adaptive saccadic eye movement control by superior colliculus," *J Neurosci*, vol. 17, pp. 9706-25, 1997.

[6] P. Lefèvre, C. Quaia, and L. M. Optican, "Distributed model of control of saccades by superior colliculus and cerebellum," *Neural Networks*, vol. 11, pp. 1175-1190, 1998.

[7] C. Quaia, P. Lefèvre, and L. M. Optican, "Model of the control of saccades by superior colliculus and cerebellum," *J. Neurophysiol.*, vol. 82, pp. 999-1018, 1999.

[8] C. Quaia, "From Vision to Action: A Neuromimetic Model of the Saccadic System," in *Ingegneria Dell'Informazione Curriculum Bioingegneria*. Trieste: Università Degli Studi Di Trieste, 2001, pp. 163.

[9] P. Lefèvre and H. L. Galiana, "Dynamic feedback to the superior colliculus in a neural network model of the gaze control system," *Neural Networks*, vol. 5, pp. 871-890, 1992.

[10] K. Arai, E. L. Keller, and J. A. Edelman, "2-Dimensional Neural-Network Model of the Primate Saccadic System," *Neural Networks*, vol. 7, pp. 1115-1135, 1994.